Goddard Space Flight Center, Greenbelt

SSU Patch 2B
(One Word Patch)

Ref: SOHO/PRG/TN/606
Issue: 1
18 July 2005

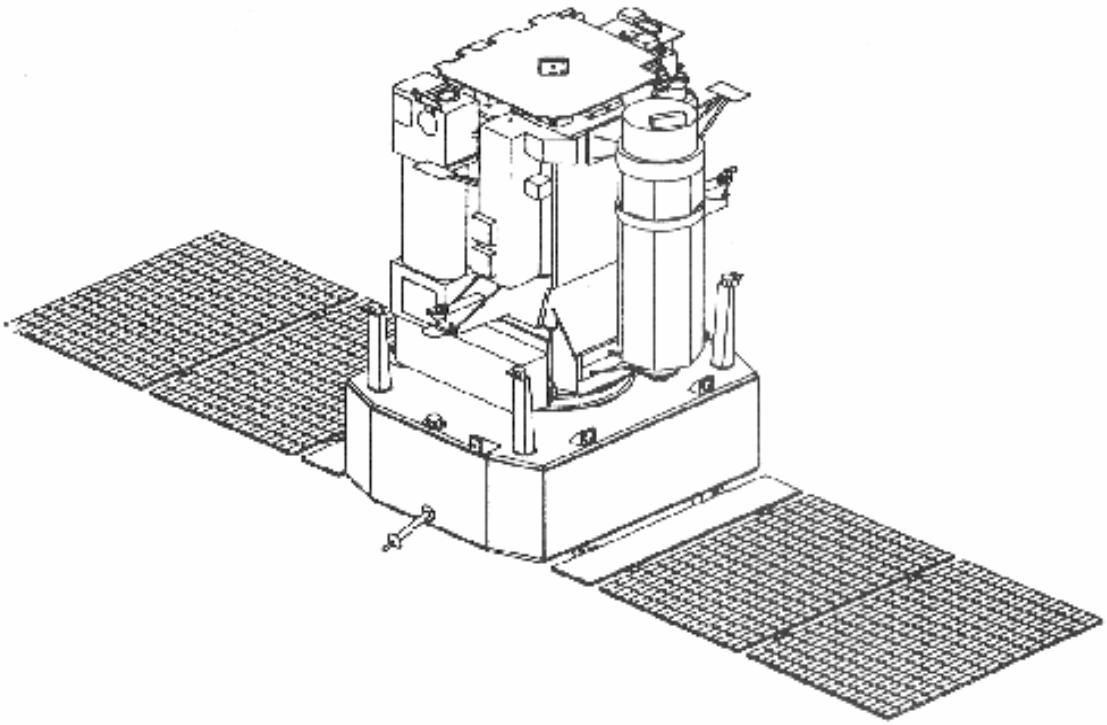

Prepared by: T. van Overbeek (ESA)
Approved by: T. van Overbeek (ESA),

Table of Contents

1 Introduction 3

2 Description of star swap on 20 January 2005 3

3 Proposed code modification.....6

4 Testing and verification.....7

5 Conclusion 8

1 Introduction

Since the start of the use of SSU patch 2A in November 1998 there have been many occasions where we swapped guide star after the SSU declared a false event. All these occurrences have the same signature. After analysis we believe all of these occurrences could have been avoided by a slight modification of SSU Patch 2A. In the next section there is a description of one of these guide star swaps during the solar flare of January 20, 2005. Section 3 outlines the logic in the existing patch and describes a one word modification. The final result is SSU patch 2B.

2 Description of star swap on 20 January 2005

Before describing the star swap first a summary of how SSU patch 2A treats single event upsets.

In the case of a particle hit which changes the stars magnitude (brightness) more than 0.1 the new position is ignored and the position of the last good cycle is reported. Note that the same holds for the star getting dimmer (magnitude value increases). The comparison is done on the absolute value of the magnitude difference. This implies that the only false events reported by the SSU to the outside world (i.e. it reports an INx value of 2) is for false event in position.
For a false event in position the rough bary center or Most Brigth Pixel (MBP) has to move more than 1 pixel. The SSU only declares a false event in position after it has tried to eliminate any false bright pixels. Note that in case of (internal) false events in magnitude during previous cycles this comparison of rough bary center distance is done with the value of several cycles ago.

Early on January 20 Star 5 was the guide star. In Figures 1 and 2 you can see that after 07:09 (= 7.15 in decimal hours in the plots) the magnitude of star 5 changes by more than the 0.1 limit. The telemetry only shows 1 point every15 seconds except for the bottom plot in figure 2 which shows the 1 Hz roll data directly derived from the SSU Z coordinate of the guide star. There you see flat lines. The jumps are caused by more particles (remember this was during a solar flare) making star 5 even brighter and changing its reported position. This can also be seen in the changing Y values of star 5. The AOCS control law reacts on these incorrect roll values and starts to drive the spacecraft in the opposite direction. This causes the star(s) to move until star 5 finally goes over the one pixel threshold for a false event on position. After five consecutive false events in position the AOCS software declares the star not eligible (see bottom plot in figure 1) and changes the guide star to the next eligible star. This happened just after 07:10 (7.17 in the plots). The 1 Hz roll data after 7.17 in figure 2 comes from the new guide star (star 1 in this case) and you see the control law forcing the roll back to its original value.

The above description is a typical example. The other three star swaps on January 20 and the earlier one on January 18 all show the same signature:

> A particle hit makes the star brighter (decreases the magnitude value) by more than the 0.1 threshold. After this the magnitude can not come back to its original value because the needed magnitude value increase is larger than 0.1. The SSU keeps reporting the incorrect changed position. The control law reacts and drives the star away until it goes over the 1 pixel threshold. The SSU then declares a false event in position and after five consecutive such false events the AOCS software swaps to use the next eligible star as the guide star.

We have seen this scenario for all star swaps (19-Jan-2000, 14-Jul-2000, 26-Aug-2000, 28-Oct-2003, 18-21-Jan-2005) which have occurred since SSU patch 2A was installed in November 1998.

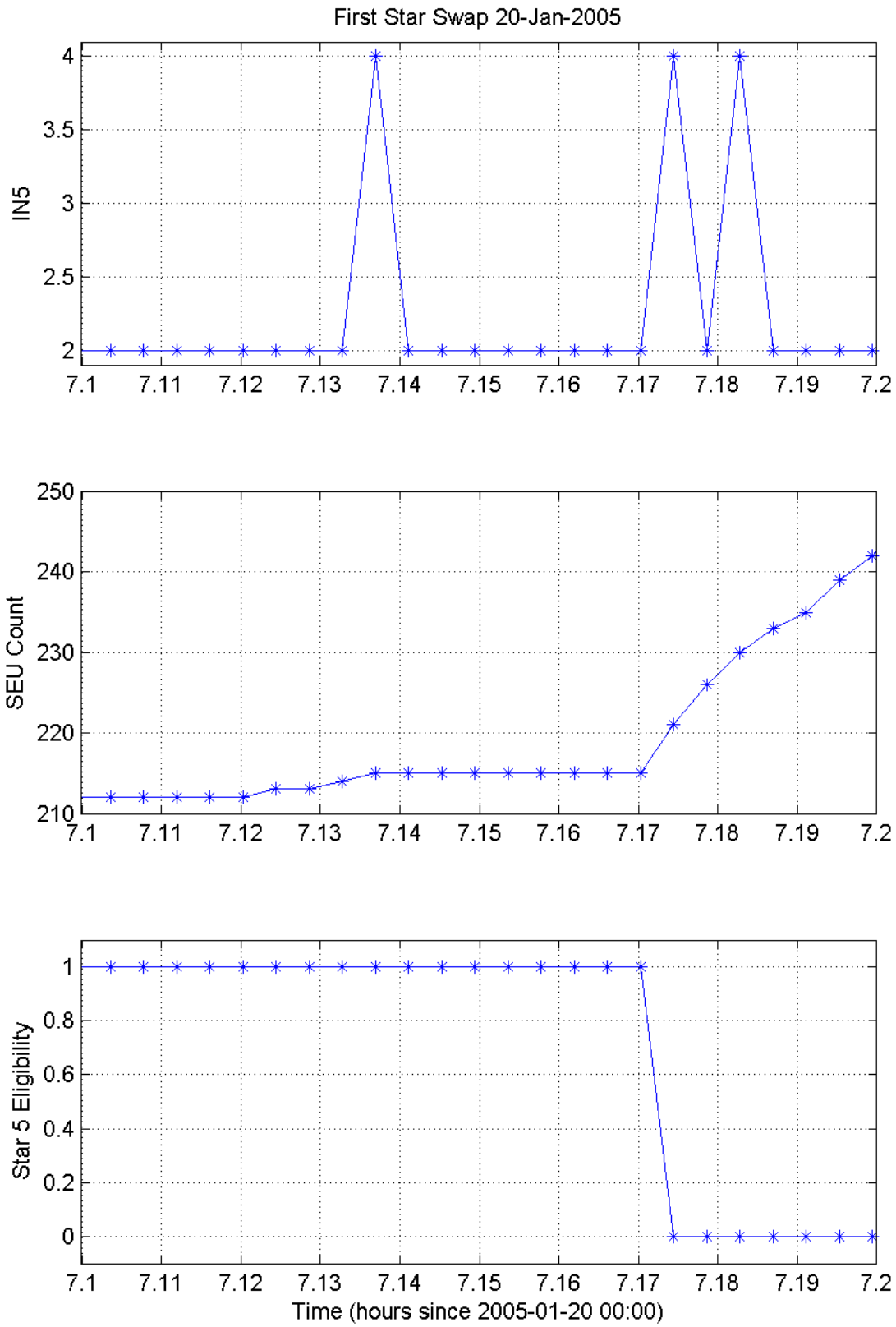

Figure 1: Star Swap on 20 January 2005, Part 1

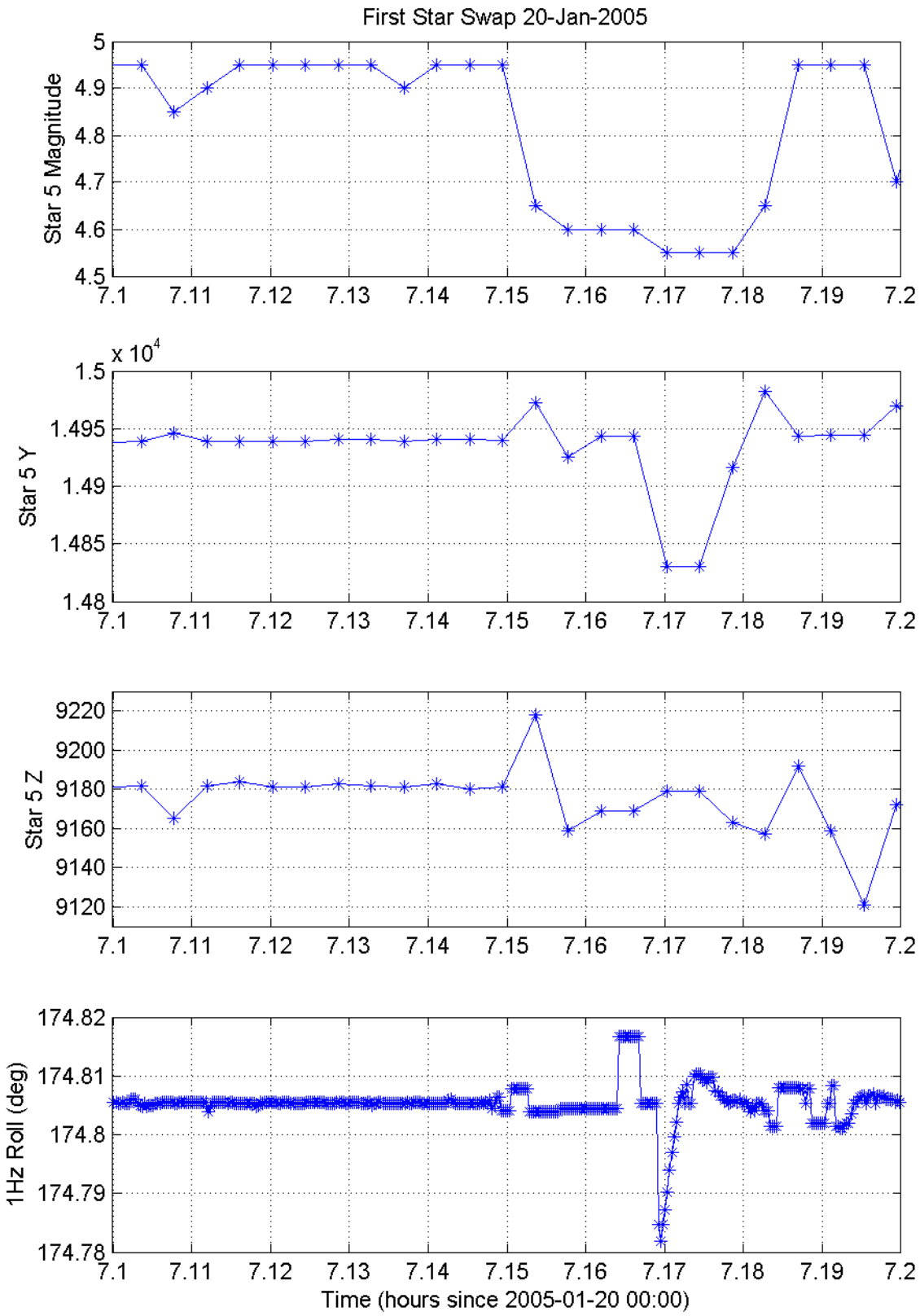

Figure 2: Star Swap on 20 January 2005, Part 2

3 Proposed code modification

As outlined in the previous section the main problem with the existing treatment of false events in magnitude by SSU patch 2A is that the 0.1 magnitude difference check is also applied when a star gets dimmer (magnitude value increases). The idea is to only do the 0.1 change in magnitude value check when the star gets brighter (magnitude value decreases) and always allow the magnitude value to increase. The existing pseudo code for the relevant routine (CHECK_MAGN_NEW) looks as follows:

```
Input    :  NSTAR                        Index of currently tracked star
            SEA_VIS_MAG                  Search magnitude thresholds
            MAGN_INDEX                   Determined magnitude
            LOCK(1..5)                   Array of current track objects lock flags
            MAGN_VALUE(1..5)             Array of current magnitude values
            INDEX_MAX_DIFF                delta magnitude false event threshold

Output  :   MAGN_VALUE(1..5)             Array of current magnitude values
            FALSE_EVENT_MAGN(1..5)       Array of magnitude false event detection flags
            OBJECT_TYPE(1..5)            Array of current tracked object types

Purpose :  Evaluates the magnitude value from MAGN_INDEX; determines the coherence of
that value with the used gain : if there is not coherence and the star is track-locked
a false event is not declared but the barycenter coordinates computed at previous
tracking cycle are restored and the remaining part of TRACK component is anyway
skipped ( on FALSE_EVENT_MAGN flags TRUE value ).
Furthermore, it classifies bright objects or refuses stars on the basis of results of
magnitude check

Function (Pseudo Code) :

CHECK_MAGN_NEW
begin

       local k,new_magn;

       k := NSTAR;
       new_magn := MAGN_INDEX - 3;
       FALSE_EVENT_MAGN(k) := “false”;
       OBJECT_TYPE(k) := “star”;

       if ( MAGN_INDEX = 2 ) then OBJECT_TYPE(k) = “bright”;

       switch ( LOCK(k) )
              begin

              case “false” :
                     if ( new_magn > SEA_VIS_MAG ) then
                            call RELEASE_STAR( k );
                     else
                            MAGN_VALUE(k) := new_magn;

              case “true” :
                     if ( abs( new_magn - MAGN_VALUE(k) ) > INDEX_MAX_DIFF )
                     then
                            begin
                            call RESTORE_BAR( k );
                            FALSE_EVENT_MAGN(k) = “true”;
                            end
                     else
                            MAGN_VALUE(k) := new_magn;

              end

end CHECK_MAGN _NEW
```

The solution in this pseudo code is to remove the abs() function and change the if statement to:

```
if ( MAGN_VALUE(k) - new_magn ) > INDEX_MAX_DIFF )
```

When the star gets brighter new_magn will be smaller than MAGN_VALUE(k) and the check will still work. When the star gets dimmer the difference MAGN_VALUE(k) – new_magn will be negative and the MAGN_VALUE(k) will be updated with new_magn.

The relevant part of the assembly code looks as follows:

```
    158       0044'                      C_TRUE
    159                                  *       ---------------------------------------
```

```
    160                                 *             case true :
    161                                 *                    if ( abs( new_magn -
MAGN_VALUE(k) ) > INDEX_MAX_DIFF )
    162                                 *                    then
    163                                 *                           begin
    164                                 *                           call RESTORE_BAR( k
);
    165                                 *                           FALSE_EVENT_MAGN(k)
= true;
    166                                 *                           end
    167                                 *                    else
    168                                 *                           MAGN_VALUE(k) :=
new_magn;
    169                                 *             end
    170                                 *        -------------------------------------
    171       0044'  C1EA 7282                    MOV    @MAGN_VALUE(R10), R7
    172       0048'  61C8                         S      R8, R7
    173       004A'  0747                         ABS    R7
    174       004C'  8807 0003*                   C      R7, @INDEX_MAX_DIFF
    175       0050'  12 05                        JLE    4$
    176       0052'  0420 0002*                   BLWP   @RESTORE_BAR
    177       0056'  072A 0001*                   SETO   @FALSE_EVENT_MAGN(R10)
    178       005A'  10 02                        JMP    CK_END
    179       005C'                       4$
    180       005C'  CA88 7282                    MOV    R8,@MAGN_VALUE(R10)
    181                                 *        -------------------------------------
    182       0060'                       CK_END
    183       0060'  C2E0 78B8                MOV    @SAVE,R11
    184       0064'  045B                         RT
```

The ‘S R8, R7’ instruction puts into R7 the result of R7 – R8. i.e. of MAGN_VALUE(K) – new_magn. The proposed patch consists of replacing the ‘ABS R7’ instruction with a ‘JLT 4$’ instruction. Then when new_magn is larger than MAGN_VALUE(k) we will always store the new magnitude value in MAGN_VALUE(k).

Summary: Replace ‘ABS R7’ (0x0747) with ‘JLT 4$’ (0x1108). Note the 08 in 0x1108 is the distance in words to reach local label 4$.

4 Testing and verification

The validation tests for the original SSU Patch 2A were run on a star tracker software simulator on a HP Unix system at ESTEC. These are reported in memo TOS-EMS/98-148/FA written by Finn Aidt and Francesco Possanzini on 29 October 1998. This memo is included in the SSU Patch 2A SMILE CSEA006 of 10 November 1998. The tests for this modification have been run on a port of the ESTEC star tracker software simulator to a Windows XP/Cygwin environment.
To validate the port, all tests performed for SSU Patch 2A have been repeated and the resulting test logs have been compared with the original 1998 test logs. The tests performed for SSU patch 2A are summarised in the following table:

Case	Description
1	Mapping mode with threshold 8.0 with patch 2A
2	Mapping mode with threshold 8.0 with patch 2A and a false pixel inserted at (132,112) after the first tracking star is acquired.
3	Mapping mode with threshold 8.0 with original FM-03 ROM and a false pixel inserted at (132,112) after the first tracking star is acquired.
4	FM-03, search/track of Mv 6.5 star at (173,166), False pixel at (172,165) with energy 2000
5	Patch 2A, search/track of Mv 6.5 star at (173,166), False pixel at (172,165) with energy 2000
6	FM-03, search/track of Mv 6.5 star at (173,166), False pixel at (171,164) with energy 2000
7	Patch 2A, search/track of Mv 6.5 star at (173,166), False pixel at (171,164) with energy 2000
8	FM-03, search/track of Mv 5.5 star at (173,166), False pixel at (172,165) with energy 600
9	Patch 2A, search/track of Mv 5.5 star at (173,166), False pixel at (172,165) with energy 600
10	FM-03, search/track of Mv 5.5 star at (173,166), False pixel at (171,164) with energy 600
11	Patch 2A, search/track of Mv 5.5 star at (173,166), False pixel at (171,164) with energy 600
12	FM-03, search/track of Mv 5.5 star at (173,166), False pixel at (172,165) with energy 2000
13	Patch 2A, search/track of Mv 5.5 star at (173,166), False pixel at (172,165) with energy 2000

14	FM-03, search/track of Mv 6.5 star at (173,166), False pixel at (171,164) with energy 2000
15	Patch 2A, search/track of Mv 6.5 star at (173,166), False pixel at (171,164) with energy 2000

The test logs produced on the WindowsXP/Cygwin environment were the same as the logs produced on the original HP Unix system in 1998.
Test cases 1, 2, 5, 7, 9, 11, 13 and 15 were repeated with the patch from section 3 above applied to the star tracker software (SSU Patch 2B) to check for any regressions.

Case	Description
16	Patch 2B, search/track of Mv 6.5 star at (173,166), False pixel at (172,165) with energy 2000
17	Patch 2B, search/track of Mv 6.5 star at (173,166), False pixel at (171,164) with energy 2000
18	Patch 2B, search/track of Mv 5.5 star at (173,166), False pixel at (172,165) with energy 600
19	Patch 2B, search/track of Mv 5.5 star at (173,166), False pixel at (171,164) with energy 600
20	Patch 2B, search/track of Mv 5.5 star at (173,166), False pixel at (172,165) with energy 2000
21	Patch 2B, search/track of Mv 6.5 star at (173,166), False pixel at (171,164) with energy 2000
22	Mapping mode with threshold 8.0 with patch 2B
23	Mapping mode with threshold 8.0 with patch 2B and a false pixel inserted at (132,112) after the first tracking star is acquired.

The patch 2B results were identical to the patch 2A results.
To test the changed functionality of patch 2B a new test scenario was used based on the star swap behaviour described in section 2. During 2 SSU cycles the energy of one pixel of the star image is increased resulting in a magnitude decrease of 0.15 over 2 cycles. Then the pixel is restored to its original energy value and the star starts moving slowly: 25 CCD ccordinates in Z and 1 CCD coordinate in Y per second (2 SSU Cycles)..

Case	Description
24	Patch 2A, search/track of Mv 5.5 star at (173,166), increase energy of pixel at (172,165) over 2 cycles, move star
25	Patch 2B, search/track of Mv 5.5 star at (173,166), increase energy of pixel at (172,165) over 2 cycles, move star

With patch 2A the reported magnitude decreases from 5.55 (raw 71) to 5.4 (raw 68). The reported position shifts from (3059,3220) to (3075,3208) in CCD coordinates. In the remaining SSU cycles the reported magnitude and star position remain unchanged and after 20 cycles a false event is reported. The false event is due to the MBP (Most Bright Pixel) moving more than 2 pixels. A few cycles later the star leaves the tracking window.
With Patch 2B the initial magnitude and position change are the same. When the false pixel is removed, the reported magnitude and position revert to their original values. When the star starts moving the SSU tracks the star and also the tracking window moving.

These results validate this patch.

5 Conclusion

A one word change to SSU patch 2A will avoid the star swaps caused by particle hits inside the guidestar image by allowing the star magnitude value to increase (star getting dimmer) without the 0.1 limit.
Since the 0.1 limit is still in place for magnitude value getting smaller (star gets brighter) there is a risk for the opposite effect: a star is getting dimmer more than 0.1 in magnitude and the SSU is not able to come back to the original magnitude. We have seen evidence of this effect after the one word change was implemented on the spacecraft on June 17.